# TRANQUILITY WITH A BEAT

## Women's City Chic Daily Wear/SS 2015

Teacher: Muge Cengiz, Dimitry Kazarian

Marina Milatic

LaSalle College
Istanbul

# BRAND PROFILE

Kumpanya 62 is fashion clothing and accessories store. It was created by LaSalle graduates as a place where young fashion designers can show their work and present their ideas to the world. Store is placed in Nisantasi where can be seen and appreciated.

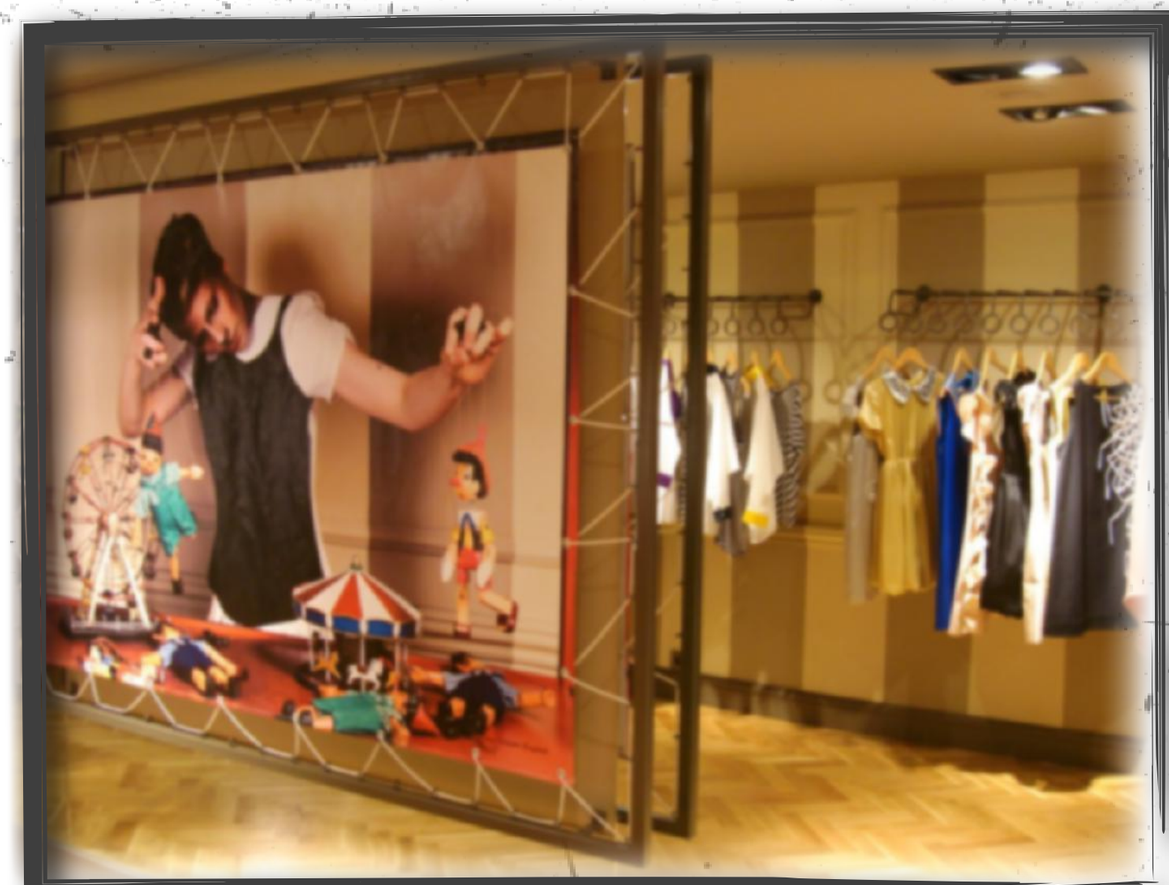

## BENCHMARK

## ASPIRATIONAL BRANDS

macy's Neiman Marcus

M|M

# CUSTOMER PROFILE

## DEMOGRAPHICS

Age: 27

Gender: Female

Education: Well educated

Occupation: Broadcast presenter

Income: 5000 ₺

Spending habbits: Shopping, rich social life

Hobbies: Traveling, photography

## PSCUCHOLOGICS

She follows fashion, have fun, knows celebrities, fashion leader.

### PRICE POINTS

Dresses: 300₺-500₺

Skirts: 200₺-350₺

Tops: 150₺-250₺

Bottoms: 250₺-400₺

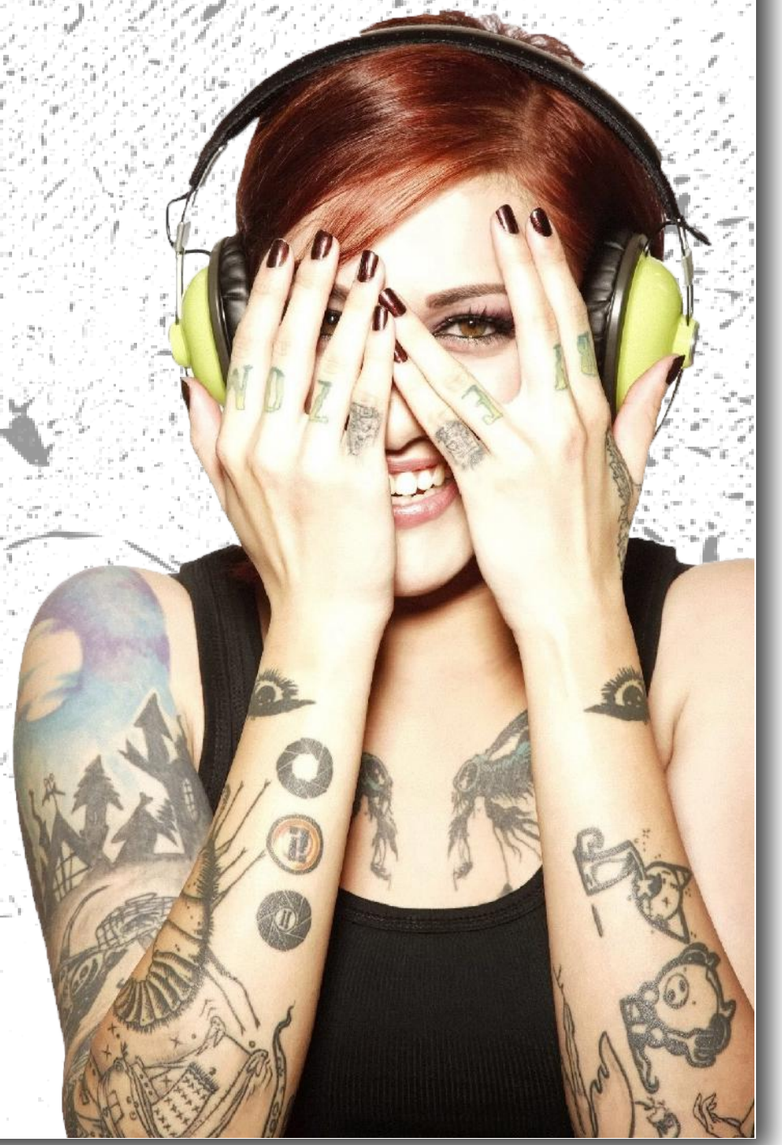

M|M

# Tranquility

tranquility {tran-'kwi-le-te] n.
the quality or state of being free
from agitation of mind or spirit;
free from disturbance or turmoil.

*Its all aboud the body and feeling of freedom, calmness and confort.*

M|M

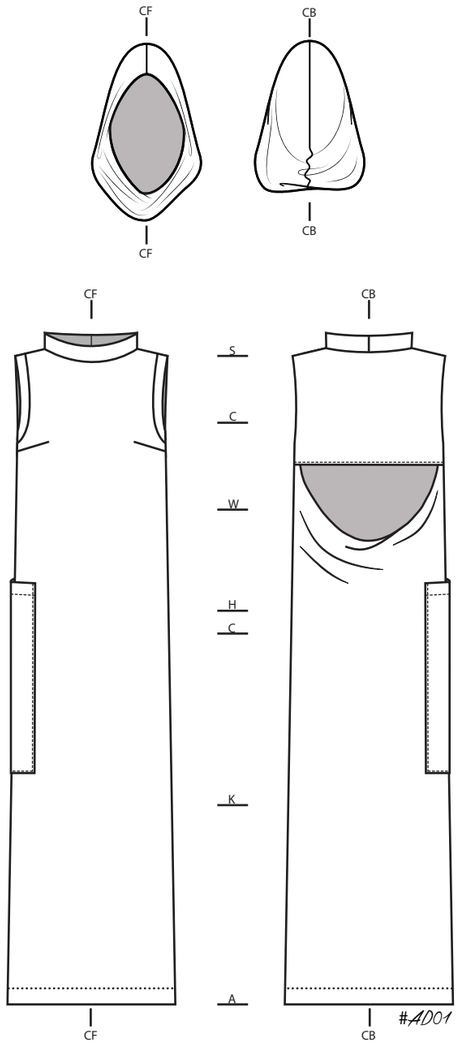


## Ankle lenght sleeveless dress, #AD01

- *Silhouette: Tube
- *Raised collar
- *Oversizedpatch pocket
- *Cut at the back
- *2 darts at budt level
- *Armhole panels
- *Topstitch on pocket, cut at the back
- *Handstitch hem
- *Oversizes cowl hood as separate piece

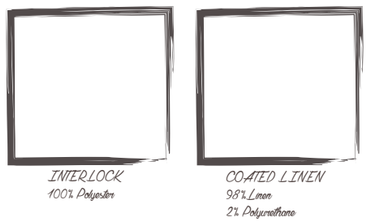

INTERLOCK
100% Polyester



COATED LINEN
98% Linen
2% Polyurethane

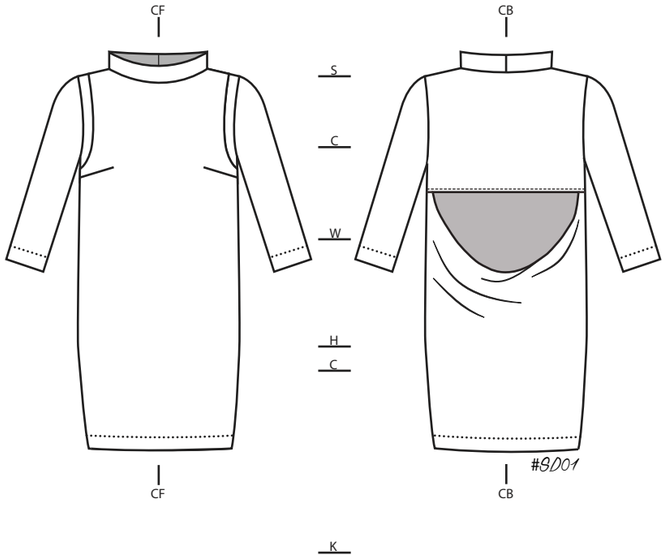


## 3/4 sleeve dress, #SD01

- *shoert dress fitted at hip level
- *3/4 sleeves
- *Raised colar
- *2 bust darts
- *Armhole panels
- *Cut at the back
- *Hand stitch sleeve, hem

INTERLOCK
100% Polyester

COATED LINEN
98% Linen
2% Polyurethane

## Sleeveless crop top, *ST01

- *Straight silhouette, waist lenght
- *Raised collar
- *2 bust darts
- *Armhole panels
- *Oversized cowl hood as separate piece

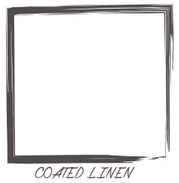

COATED LINEN
98% Linen
2% Polyurethane

ANTIQUE SATIN
95% Polyester
5% Elastane

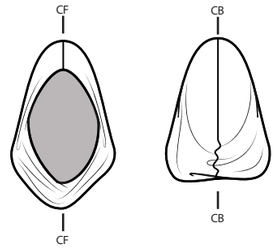


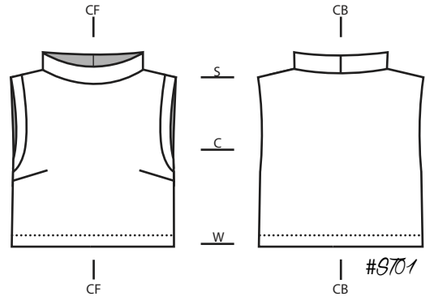


## Low rise yoga pants, #LR01

- *Low rise rib knit waistband
- *Ankle lenght
- *2 patch pockets on side
- *Panels at side seam
- *Rib knit ankle cuffs
- *Topstitch on pockets, hem

RIB KNIT
50% Cotton
50 % Polyester

COATED LINEN
98% Linen
2% Polyurethane

ANTIQUE SATIN
95% Polyester
5% Elastane

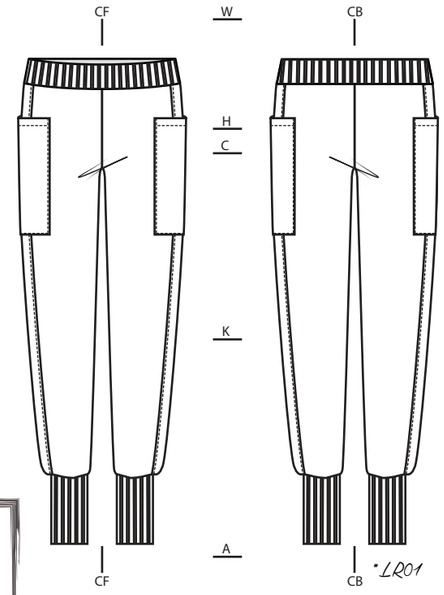


M|M

M|M

# Cork

ANTIQUE SATIN
95% Polyester
5% Elastane

RIB KNIT
50% Cotton
50 & Polyester

COATED LINEN
98% Linen
2% Polyurethane

INTERLOCK
100% Polyester

M|M

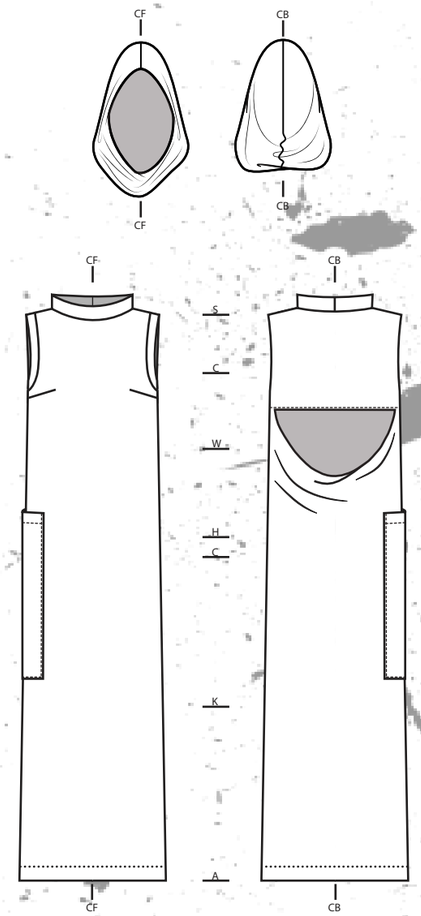

## Ankle lenght sleeveless dress, #AD01

- Silhouette: Tube
- Raised collar
- Oversized patch pocket
- Cut at the back
- 2 darts at bust level
- Armhole panels
- Topstitch on pocket, cut at the back
- Handstitch hem
- Oversizes cowl hood as separate piece

INTERLOCK
100% Polyester

COATED LINEN
98% Linen
2% Polyurethane

M|M